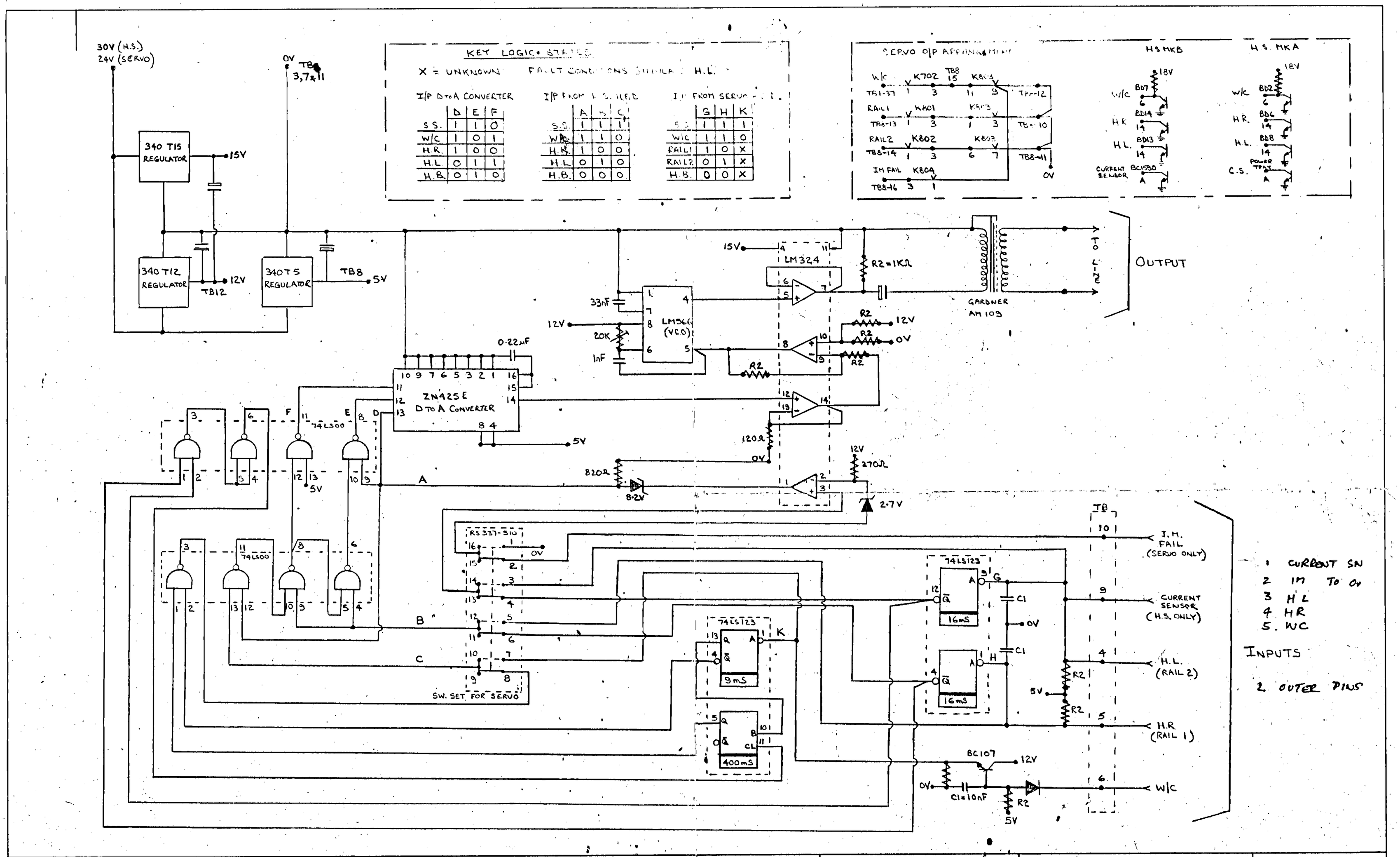

	Revisions		

British Railways Board - Scottish Region
Chief Signal and Telecommunications Engineer

British Rail

EDINBURGH HBD INTERFACE
TRANSMITTER
2nd PROTOTYPE (DUNBAR)

Chief S & T Engineer

No. TD 79/20

A2 BR 888/19

J1067