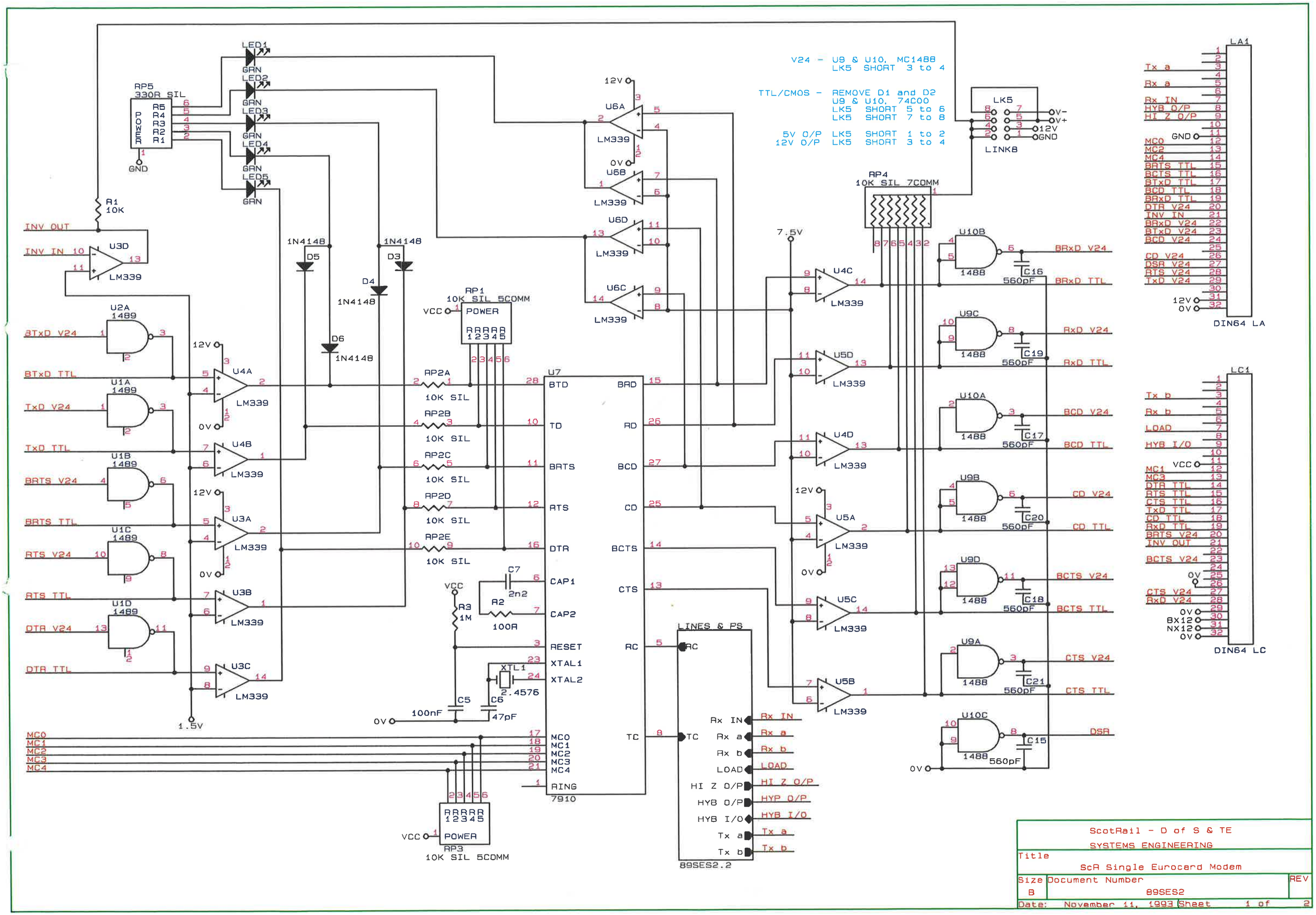
V24 - U9 & U10, MC1488
LK5 SHORT 3 to 4
TTL/CMOS - REMOVE D1 and D2
U9 & U10, 74C00
LK5 SHORT 5 to 6
LK5 SHORT 7 to 8
5V O/P LK5 SHORT 1 to 2
12V O/P LK5 SHORT 3 to 4
RP5
330R SIL
LED1
LED2
LED3
LED4
LED5
GRN
GND
R1
10K
INV OUT
INV IN
U3D
LM339
U2A
1489
BTxD V24
BTxD TTL
U1A
TxD V24
TxD TTL
U1B
BRTS V24
BRTS TTL
U1C
RTS V24
RTS TTL
U1D
DTR V24
DTR TTL
U4A
U4B
U3A
U3B
U3C
12V
0V
1.5V
1N4148
D5
D6
D4
D3
RP1
10K SIL 5COMM
POWER
VCC
RP2A
RP2B
RP2C
RP2D
RP2E
10K SIL
U7
BTD
TD
BRTS
RTS
DTR
CAP1
CAP2
RESET
XTAL1
XTAL2
RING
7910
BRD
RD
BCD
CD
BCTS
CTS
RC
TC
C7
2n2
R2
100R
R3
1M
XTL1
2.4576
C5
100nF
C6
47pF
MC0
MC1
MC2
MC3
MC4
RP3
U6A
U6B
U6C
U6D
U4C
U4D
U5A
U5B
U5C
U5D
7.5V
RP4
10K SIL 7COMM
LK5
LINK8
V-
V+
GND
LINES & PS
Rx IN
Rx a
Rx b
LOAD
HI Z O/P
HYB O/P
HYB I/O
Tx a
Tx b
89SES2.2
U10B
U9C
U10A
U9B
U9D
U9A
U10C
1488
C16
C19
C17
C20
C18
C21
C15
560pF
BRxD V24
BRxD TTL
RxD V24
RxD TTL
BCD V24
BCD TTL
CD V24
CD TTL
BCTS V24
BCTS TTL
CTS V24
CTS TTL
DSR
LA1
DIN64 LA
LC1
DIN64 LC
BX12
NX12
ScotRail - D of S & TE
SYSTEMS ENGINEERING
Title
ScR Single Eurocard Modem
Size
B
Document Number
89SES2
REV
Date: November 11, 1993
Sheet 1 of 2

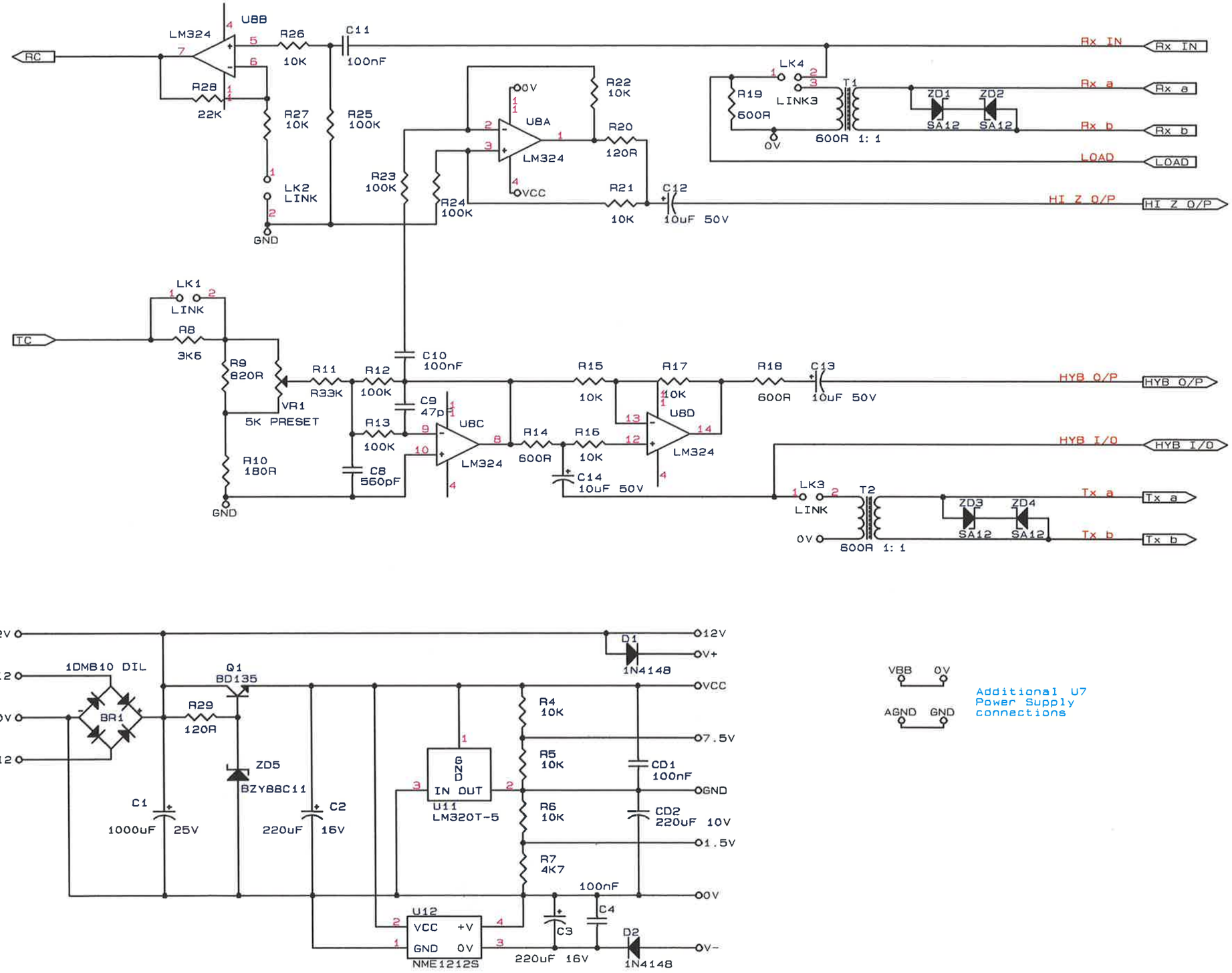

Additional U7 Power Supply connections

MODES

CD2 increased to 220uF from 100nF to improve -5V regulation 26/11/92

ScotRail - D of S & TE SYSTEMS ENGINEERING		
Title ScR Single Eurocard Modem - LINES & PS		
Size B	Document Number 89SES2	REV
Date: October 22, 1993	Sheet 2 of 2	