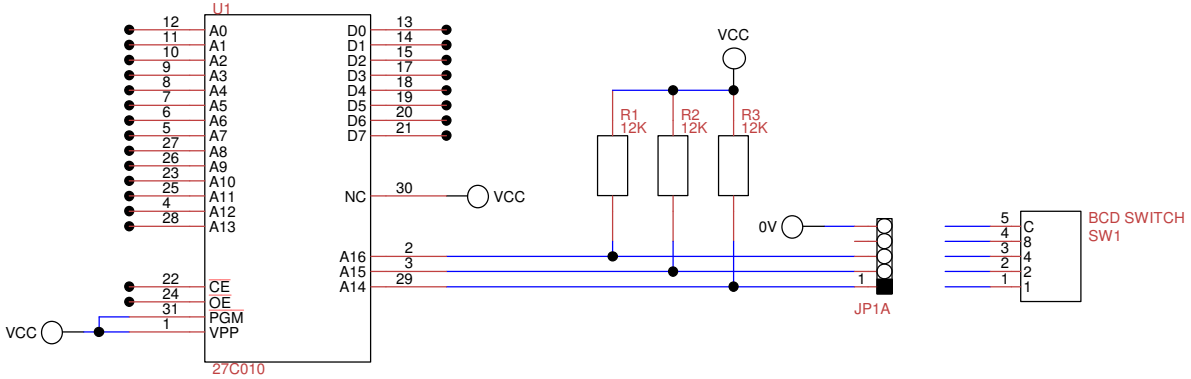

NOTES
ALL COMPONENTS AND JUMPERS TO BE INTERNAL TO U1 OUTLINE
U1 PINS 1 TO 32 DRILL SIZE 1.6mm
JP4 - UNDRILLED PAD NEXT TO PIN 27
ALL OTHER HOLES 0.8mm
RESISTORS 0.25W
BOARD TO BE SINGLE SIDED
BOARD SIZE 1.6 inch by 0.7 inch

Title ROM128		
Author		
File C:\Users\Derek\Documents\ROM128.dsn		Document
Revision 1.0	Date 02/10/96	Sheets 1 of 1